FOREVER
fun line

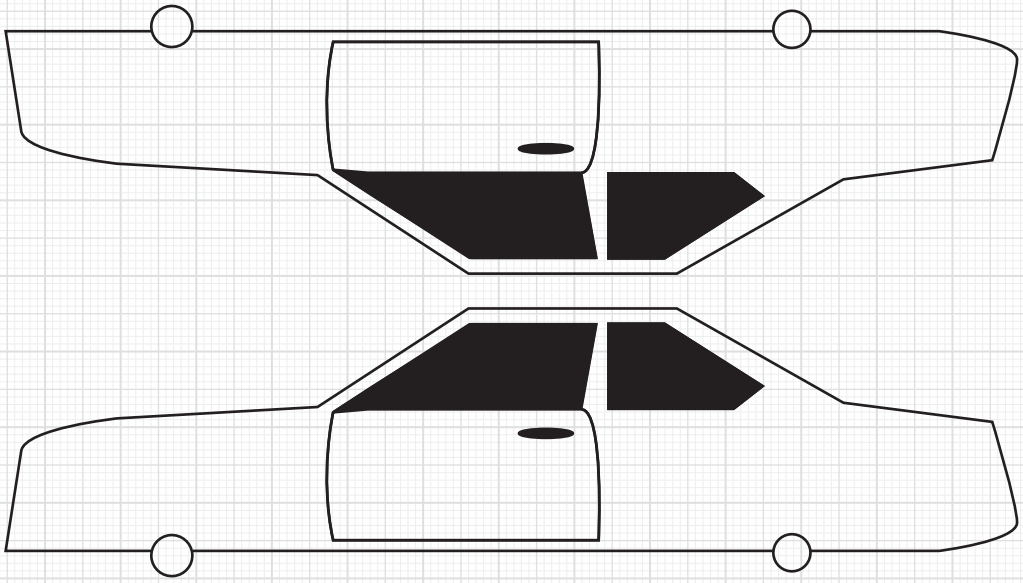

4X

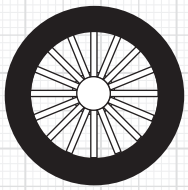

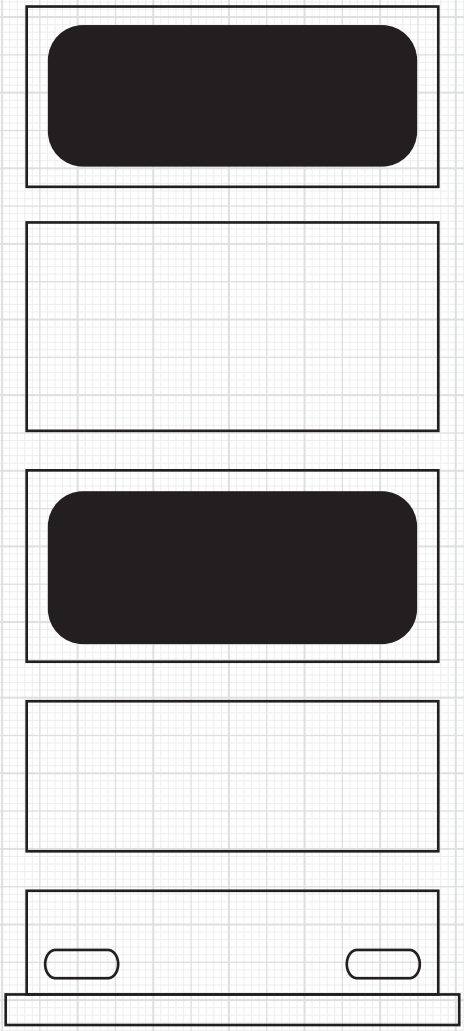

1X

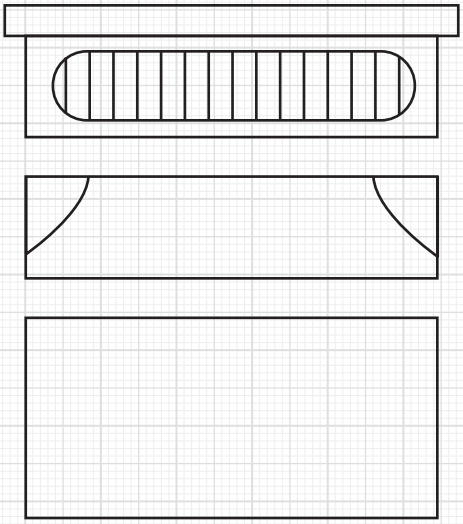

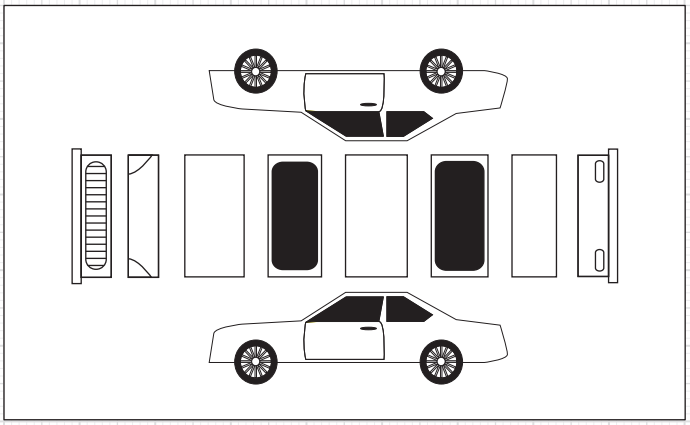

3D IDEA PRINTING PEN

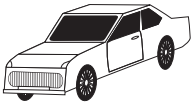

CAR

NO. 13